Technical Data Sheet

Comfort Plus Commercial

Electric Thermal Storage Heating System

Model: 6140 Forced Air System
Model: 7140 Hydronic System

Rev 2

STEFFES Heating Systems

Dimensions

- Units will fit through a 30” doorway without disassembling. For smaller openings or for ease in moving, the units can be disassembled.

Model 6140

- The return air plenum as shown in the schematic can be ordered as an optional accessory from the factory.

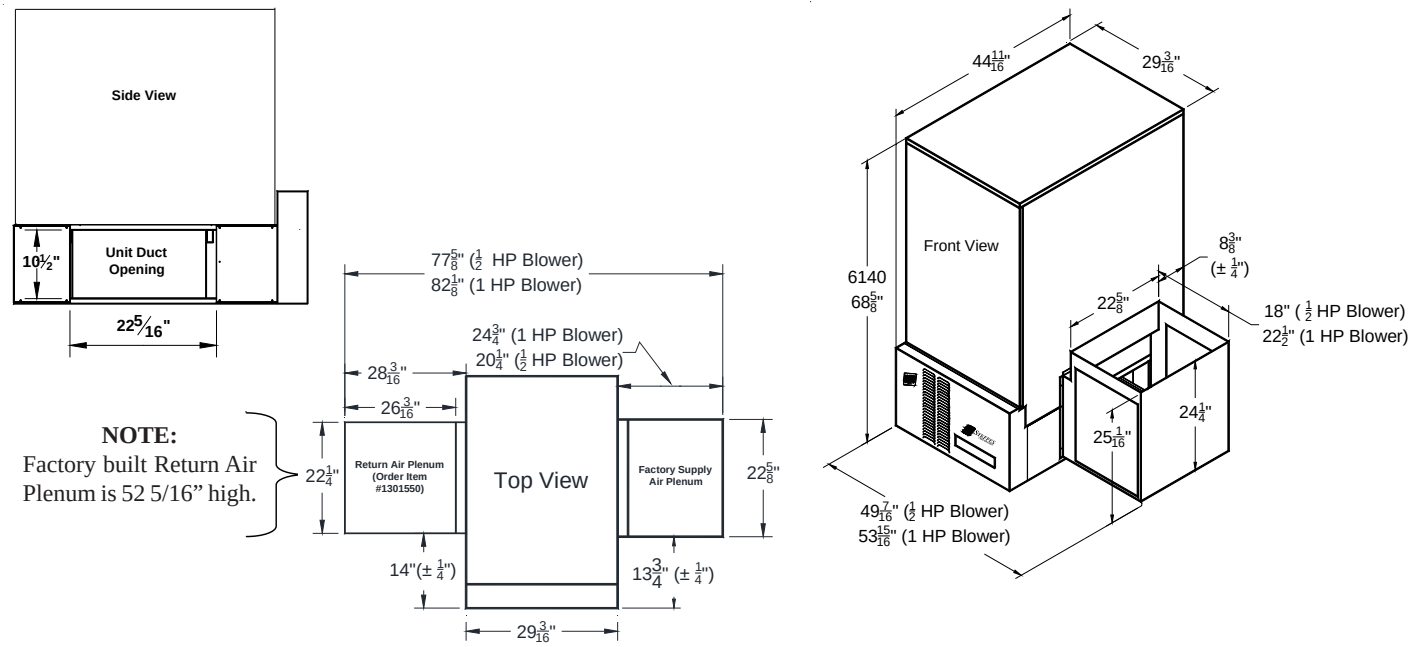

Model 7140

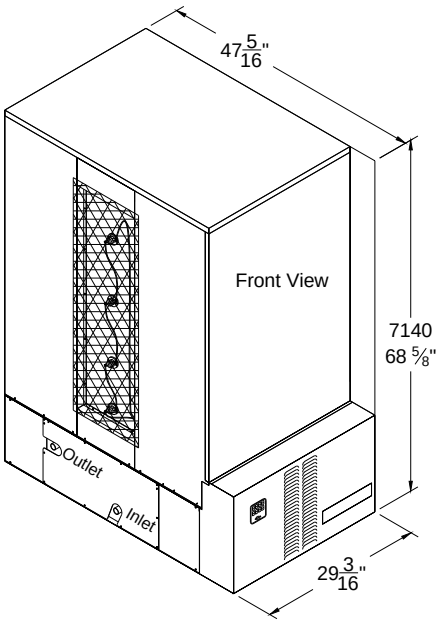

Placement and Clearances

- The area in which the Comfort Plus unit is installed must remain free of debris and adequate ventilation is required to maintain room temperature of less than 85°F.
- Adhere to all national and local electrical and building code placement requirements for electric heating appliances.
- An 18” high stand is available from the factory to elevate the system if necessary.

Model 6140

- Downflow configuation is available with the addition of the optional downflow kit accessory. In downflow configuration, the furnace must be installed in a fashion that allows access to the supply blower’s plenum cover. It is recommended to elevate the furnace a minimum of 10" to achieve this access.

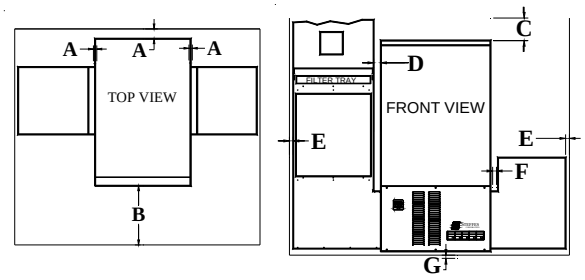

A Back and sides = 3 inches (from combustible material)
B Front = 36 inches (for ease in servicing)
C Top = 6 inches (from combustible material)
D Between Duct and Left side of system = 2 inches
E Outer Sides of Return and Supply Ducts = zero clearance
F Between Duct and Right side of system = zero clearance
G Bottom = zero clearance

Model 7140

- Unit is factory configured for left side plumbing attachment only.
- For room ventilation purposes, a static heat recovery unit or air handler are options that are available to move the radiant heat from the furnace outer panels to a more desirable area.

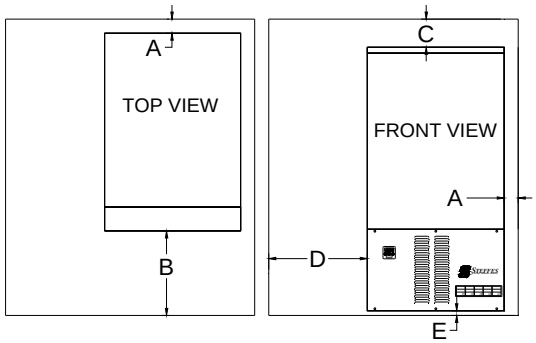

A Back and Right Side = 3 inches (from combustible material)
B Front = 36 inches (for ease in servicing)
C Top = 6 inches (from combustible material)
D Left Side = 36 inches (for ease in servicing)
E Bottom = 1 inch clearance

Line Voltage Field Connections

208V or 240V

- 208V and 240V systems are factory configured with breakers which are intended for use as service disconnects only. The 15 amp breaker powers the blowers and system controls circuit. The 60 amp breakers power the element circuits.

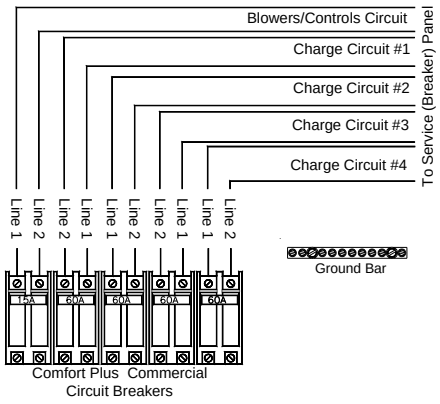

- 208V and 240V systems are factory configured for multiple circuit, single phase connections. If single feed is desired, a single feed kit is available from the factory. Phase balancing is recommended when making connections in 3-phase applications.

277V or 347V

- 277V and 347V systems are factory configured only for single feed connections only to the element circuits. The internal controls and motors only operate at 240V/208V. A stepdown transformer is required for blowers/controls circuit if it is being fed from the element circuits. The transformer is available from Steffes or it can be sourced from a local supply outlet.
- Connections are made through fuse and neutral blocks.

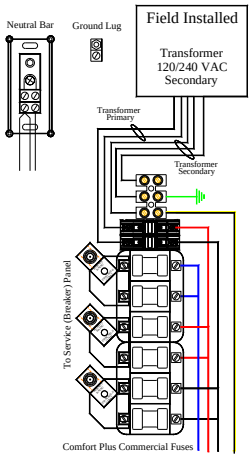

Step Down Transformer Specifications

Primary Winding	Secondary Winding	KVA Rating	Application
Must match units input voltage	120/240 VAC	1 KVA	◆ 7140 Model installed without a Steffes Air Handler
		2 KVA	◆ 6140 Model ◆ 7140 Model when installed with a Steffes Air Handler

Supply Air Delivery Matrix

- Applicable to Model 6140 and to Model 7140 when interfaced with a Steffes Air Handler.
- External static pressure should not exceed .75 inches water column.

Variable Speed ECM Blower Options:

Configuration	Field Selectable Air Flows (CFM)
½ HP	1000, 1200, 1400, 1600
1 HP	1200, 1400, 1600, 2000

- When interfaced to a 2-stage air conditioner or heat pump, the ECM motor will operate at 70% of the selected air flow in low speed (Stage 1) compressor mode. If 50% air flow is required in low speed, a Stage 1 speed adjusting relay must be installed. Steffes recommends the Allen Bradley Relay #700-HA32A24 with Relay Base #700-HN125 or equivalent.

Optional Steffes Air Handler (Model 7140 ONLY)

- The Steffes Air Handler is an optional device designed to interface to the Comfort Plus Commercial Hydronic furnace to allow it to provide forced air heating as a stand alone furnace or as a supplement to other ducted heating systems such as a heat pump. When used with a heat pump, it allows the Comfort Plus Commercial Hydronic furnace to serve as the back-up heat source and to provide comfort modulation. Heat pumps can be operated to much lower temperatures allowing for full utilization of its efficiency and optimizing system performance. A duct sensor constantly monitors outlet air temperature and modulates the precise amount of stored off-peak heat needed to eliminate cool and uncomfortable discharge air temperatures typically associated with heat pump systems during cool outdoor temperatures. The air handler will also direct the heat lost statically through the furnace's outer panels into the ductwork for delivery to the living space (automatic static heat recovery). The internal controls of the Comfort Plus Commercial Hydronic furnace automatically regulate the operation of the air handler. The Steffes Air Handler includes a return plenum, supply air blower, water coil, and air filter. It is painted and fully insulated.

SPECIFICATIONS

	½ HP, 60 HZ Variable Speed (ECM) Air Handler	1 HP, 60 HZ Variable Speed (ECM) Air Handler
Order Item Number	1302132	1302134
Dimensions (H x L x D)	72 11/16" x 23 ½" x 23 7/8"	75 11/16" x 26 ½" x 23 7/8"
Approximate Weight	200 lbs	225 lbs
Maximum Static Pressure (inches water column)	.75 inches H_20	.75 inches H_20
Maximum Water Coil Output	60,000 BTU/hr	90,000 BTU/hr
Maximum Outlet Temperature	120°F	120°F
A-Coil Tray - Front Access (H x L x D)	30" x 22 5/16" x 22 3/4"	33" x 25 5/16"x 22 3/4"
Filter Dimensions	20" x 20" x 2"	25" x 20" x 2"
Voltage	240/208 VAC	240/208 VAC
Wattage	560W	1,050W
CFM ratings	1000, 1200, 1400, 1600	1200, 1400, 1600, 2000

- ½ HP configuration can accommodate most 1.5 to 4 ton heating/cooling coils
- 1 HP configuration can accommodate most 3 to 5 ton heating/cooling coils
- The 1 HP air handler 90,000 BTU/hr water coil output may decrease when using heating/cooling coils smaller than 5 tons

DIMENSIONAL DIAGRAMS

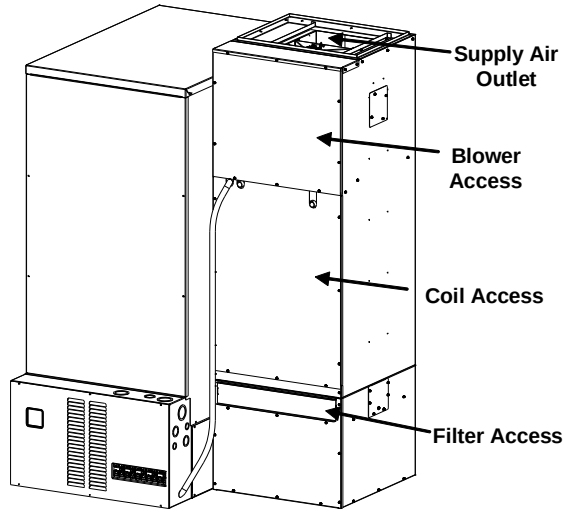

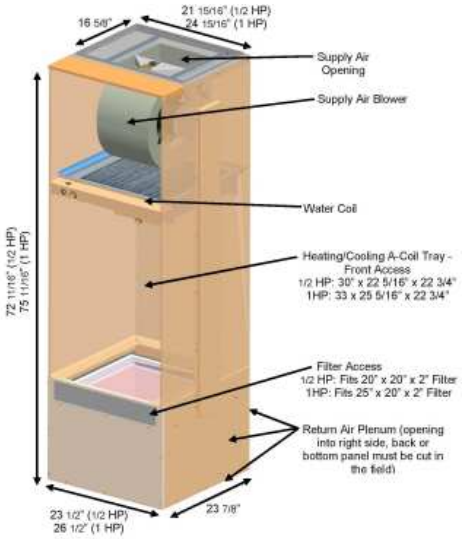

Low Voltage Connections - Wall Thermostat, Sensor, and Compressor

- 24 VAC wall thermostat must be used. Honeywell brands shown in schematics and recommended.
- A digital wall thermostat is recommended for use with Comfort Plus systems. If utilizing a mechanical wall thermostat, it may be necessary to add a load resistor (250 ohm, 5 watt) due to the low current draw (.01 amp) on the heat call input circuit.
- An outdoor sensor is included with the furance to provide outdoor temperatures for automatic charge control (regulation of stored heat).

Stand Alone Applications

Model 6140

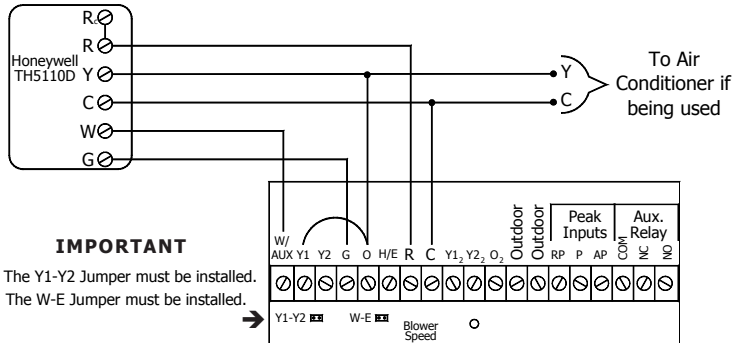

IMPORTANT

The Y1-Y2 Jumper must be installed.
The W-E Jumper must be installed.

Model 7140 - Single Hydronic Heating Zone Application

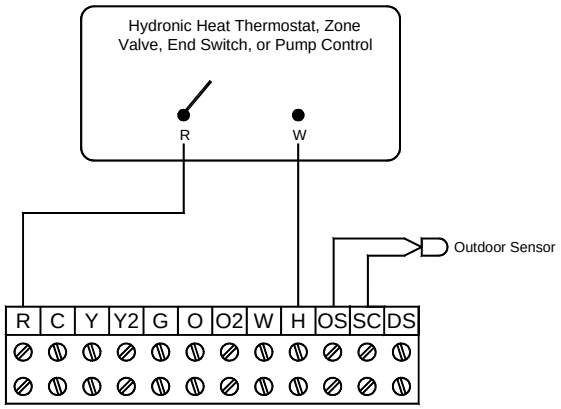

Furnace 12 Position Terminal Block

Heat Pump Applications

Single Stage Heat Pump

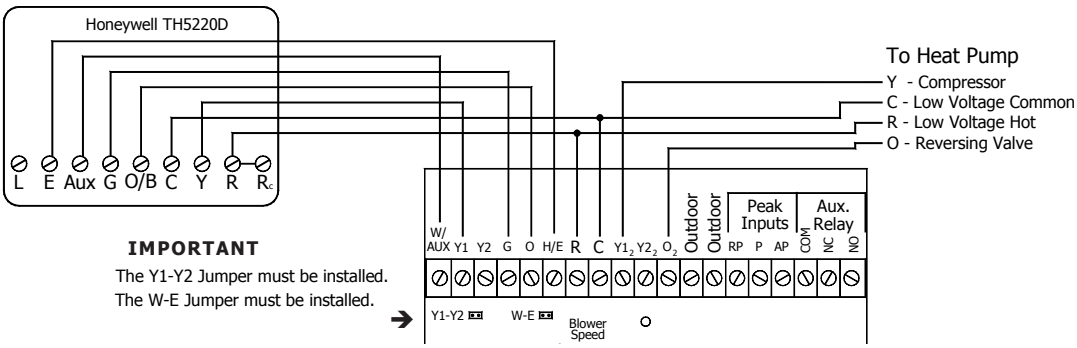

IMPORTANT

The Y1-Y2 Jumper must be installed.
The W-E Jumper must be installed.

Two Stage Heat Pump

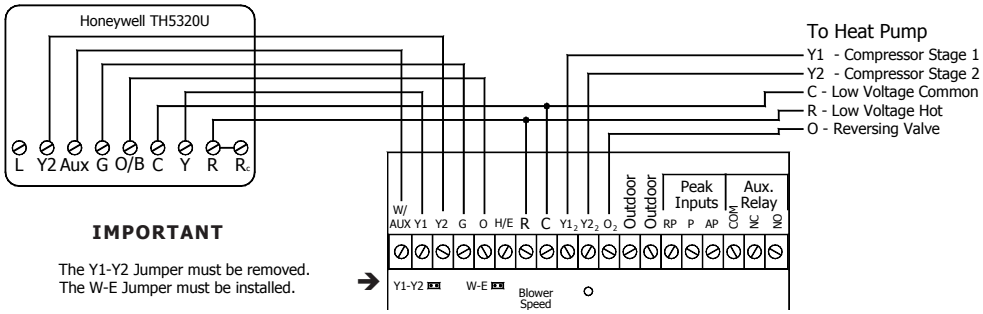

IMPORTANT

The Y1-Y2 Jumper must be removed.
The W-E Jumper must be installed.

Plumbing (Model 7140 ONLY)

Primary Water Loop Plumbing

- The Comfort Plus Hydronic Commercial Unit must be plumbed with a primary water loop consisting of a minimum of 10’ of 1” pipe and its own circulator pump (Grundfos UP15-42F single speed 115 VAC or equal recommended). The primary loop serves to regulate heat transfer from the unit’s heat exchanger. A kit containing components generally installed with hydronic heat systems is available from Steffes. The primary loop must be powered by the Comfort Plus control system.
- The Comfort Plus Hydronic Commercial Unit is factory configured for left side plumbing attachment only.

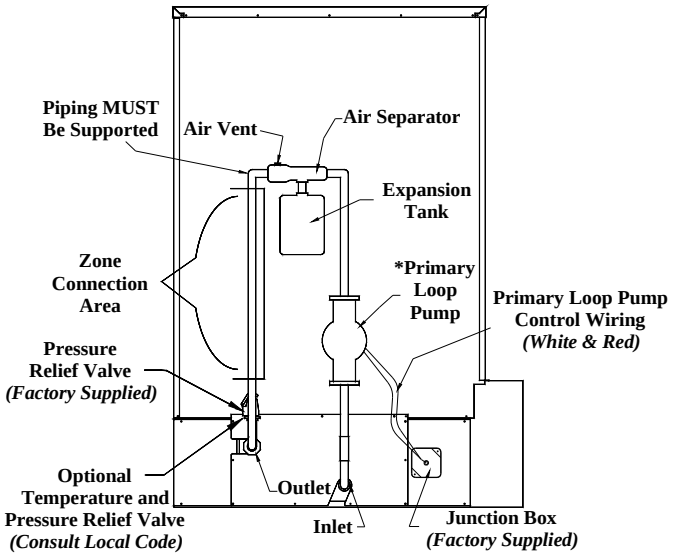

Typical System Plumbing

- There are many ways to connect plumbing and regulate temperature of water supplied from the primary loop. These are typical plumbing schematics.

Single Temperature Zone

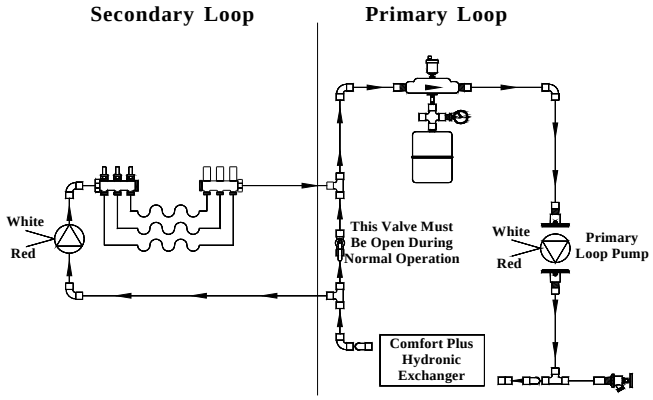

Air Handler Applications

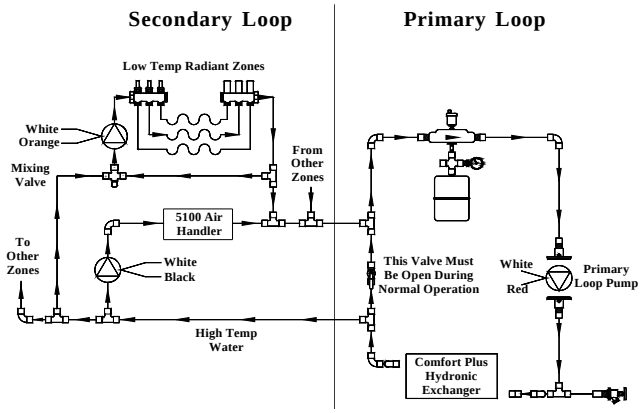

Pressure Drop Through Heat Exchanger

STATIC PRESSURE (Feet Water Column) **Based on 80 degree entry water temperature with a 50% glycol mix.**	.1 ft @ 2 GPM .2 ft @ 4 GPM .4 ft @ 6 GPM .7 ft @ 8 GPM 1.1 ft @ 10 GPM

Typical Floor Zone Design

Pipe Size	Maxiumum Pipe Length
3/8"	200'
1/2"	300'
5/8"	500'

Pipe length will vary by manufacturer.

Load Management

The Comfort Plus Commercial is designed to operate under any of the following load control strategies:

1. **On-Peak/Off-Peak Signal:** Comfort Plus Commercial systems respond to external load control device (contact closure) and will charge during off-peak periods. An auxiliary contact is provided on the furnace for controlling external loads. The on-peak/off-peak signal can be initiated via a direct low voltage wiring from the utility signaling device, the optional Steffes Power Line Carrier (PLC) Transceiver (only systems with 208V/240V blower control circuit feeds) or the optional Steffes Time Clock Module. Connections for direct wiring are shown. These connections are not necessary if using the PLC transmitter or time clock module. A manual or instruction sheet for these items are available upon request.
2. **4-20 Milliamp (1-5 Volt DC):** When utilizing 4-20 milliamp control, the Comfort Plus Commercial system receives a signal from an external load control device such as a building load management system. (Refer to the diagram showing connection points.) The furnace has the ability to adjust its rate of energy consumption (kW) based on the signal being received. While the furnace continuously monitors the signal and sheds its load as needed in relation to this input, restoration of all or some of its load will occur in 15 minute increments.
3. **Pulse Monitoring:** Comfort Plus Commercial units have the ability to monitor pulse inputs from the power company's electric meter and proportionally charges when demand free power is available. An optional load management control module (Order Item #1908410) is available that will allow the furnace to control up to 16 other external loads.

4-20 Milli-Amp or Pulse Monitoring Connections

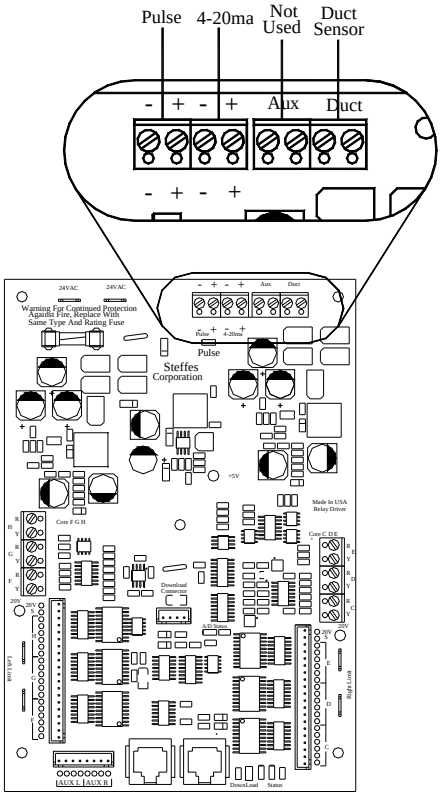

Low Voltage Direct Wired Utility On-Peak/Off-Peak Connections

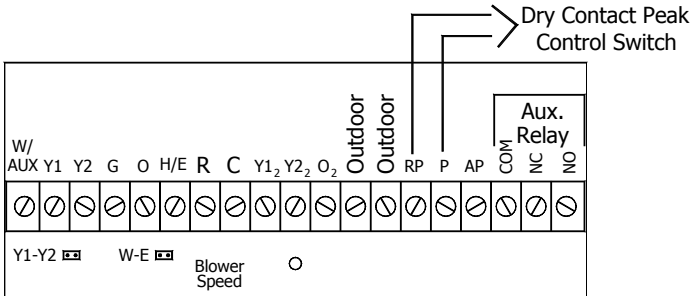

Bacnet (Optional)

A Bacnet control option is available for interface with the Comfort Plus Commercial systems. This device is easily integrated into most building automation systems to provide building managers full control and visibility of the heating systems operation.

Bacnet allow the following functions to be monitored with simple, twisted-pair communication:

- Real-time system monitoring
- Full thermostat control
- Monitoring of heat storage levels in the brick and all system temperatures
- Remote configuration, testing and adjustment
- Service requirement alerts

Specifications

	Model 6140							Model 7140						
Voltage	208	240		277		347		208	240		277		347	
Charging Input (kW)	36	36	42.75	38.4	46.5	36	46.5	36	36	42.75	38.4	46.5	36	46.5
Element Current Draw (Amps)	174	150	179	47	56	35	45	174	150	179	47	56	35	45
Phase	Single			Three				Single			Three			
Number of wires - See Note 1	2			4				2			4			
Pump/Blower/Controls Max Circuit Required (Amps)	7							10						
Single Feed Minimum Circuit Ampacity (Amps) - See Note 1 & 2	226	197	232	63	75	47	60	229	200	236	63	76	49	61
Blower/Controls Voltage (VAC) - See Note 2	208/240							208/240						
Pump Voltage - See Note 2	N/A							120V (Netural Conductor Required)			120V			
Storage Capacity - See Note 3 kWh BTU	240 818,800							240 818,800						
Approximate Installed Weight (lbs)	3,859							3,894						
Max Coil Dimensions (W x D x H) - See Note 4	26” x 22” x 31”							½ HP: 30” x 22 5/16” x 22 3/4” 1 HP: 33” x 25 1/4” x 22 3/4”						
Pipe Size (Inlet/Outlet)	N/A							1”						
Primary Loop Requirements	N/A							Minimum of 10’ of 1” pipe						
Output Water Temp - Selection Range	N/A							50°F to 185°F						
Available Maximum Working Pressure Ranges – See Note 5	N/A							20 PSIG requires 30 PSI Pressure Relief Valve 60 PSIG requires 75 PSI Pressure Relief Valve (Standard) 125 PSIG requires 150 PSI Pressure Relief Valve						
Minimum Flow Rate (Primary Loop)	N/A							1 GPM per 10,000 BTU of required output at 20°F temperature rise (10 GPM maximum)						

Note 1: 208V and 240V systems are factory configured to be field connected to multiple, single phase, line voltage circuits. If single feed to element and blowers/system controls circuit is desired, an optional single feed kit is available to order. Connection to 3-phase power is acceptable and can improve phase balancing.

Note 2: 277V/480V and 347V/600V systems are configured for only single feed, three phase line voltage connections to the elements. If feeding the blowers/controls from the element circuit, a step down transformer must be field installed.

Note 3: The size and heating ability of the system required for an installation is dependent on the thermal load and the demand profile of the facility. The daily rate structure of the utility can also affect size of furnace needed in an application. If the unit is not installed within the heated area, heat lost statically must be taken into account when sizing a system. Contact Steffes Corporation for assistance in selecting an appropriately sized system.

Note 4: The indoor coil or outdoor compressor of an air conditioner or heat pump are not included with the furnace. The Steffes return air plenum (for use with the 6140) and the Steffes air handler (for use with the 7140 to allow it to provide forced air heating) are each configured to house an indoor coil and can be ordered from the factory as an optional accessory. Dimensions listed are that of the inner coil area in the plenum. For larger coils, field provisions to the factory built plenums are necessary or one will need to be custom built by the installer. (In heat pump applications, the indoor coil MUST be placed on the return air side.)

Note 5: Optional pressure relief valves providing 20 PSIG or 125 PSIG maximum working pressures are available as special factory orders.