Rev 2

Technical Data Sheet

Comfort Plus Hydronic

Electric Thermal Storage Heating System

Models 5120, 5130, 5140

STEFFES Heating Systems

Unit Dimensions

- Unit will fit through a 30” doorway without disassembling. For smaller openings or for ease in moving, the unit can be disassembled.

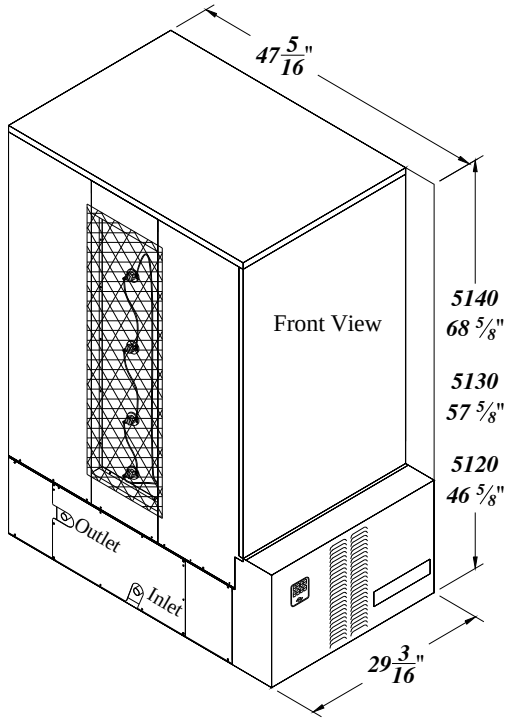

Line Voltage Field Connections and Circuit Phasing

- The breakers on the Comfort Plus are intended for service disconnect only. The 15 amp breaker powers the pump, blowers and system controls circuit. The 60 amp breakers power the element circuits.
- Unit is factory configured with multiple circuit, single phase connections. If single feed is desired a single feed kit is available from the factory. Phase balancing is recommended when making connections in 3-phase applications.
- The controls circuit MUST include a neutral wire.

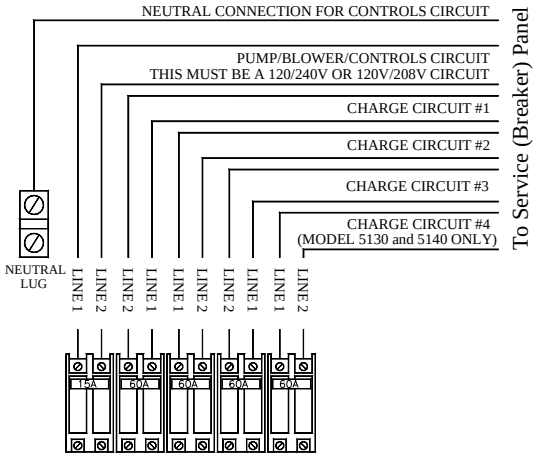

Placement and Clearances

- The area in which the Comfort Plus unit is installed must remain free of debris and adequate ventilation is required to maintain room temperature of less than 85°F.A static heat recovery unit or air handler are options that are available to move the radiant heat from the outer panels to a more desireable area.
- Adhere to all national and local electrical and building code placement requirements for electric heating appliances.
- An 18” high stand is available from the factory to elevate the system if necessary.

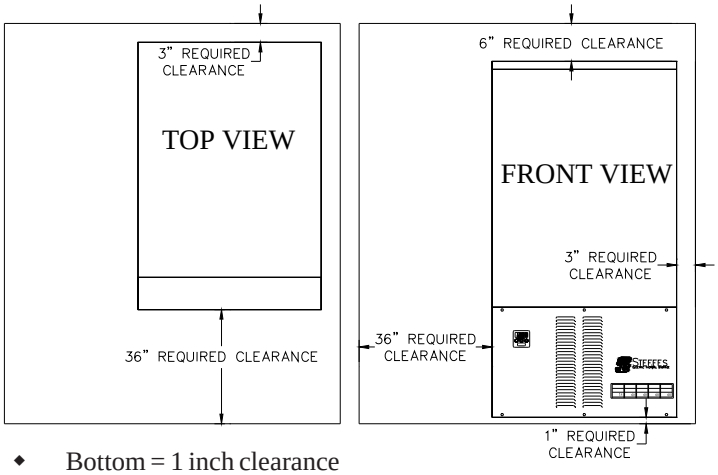

- Bottom = 1 inch clearance
- Top = 6 inches (from combustible material)
- Front = 36 inches (for ease in servicing)
- Left Side = 36 inches (for ease in servicing)
- Back and Right Side = 3 inches (from combustible material)

Low Voltage Peak Control Connections

- If using the optional Steffes Power Line Carrier Transceiver or Steffes Time Clock Module for peak control, the direct wiring shown here is not necessary.

Without Air Handler

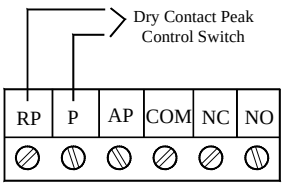

with Air Handler

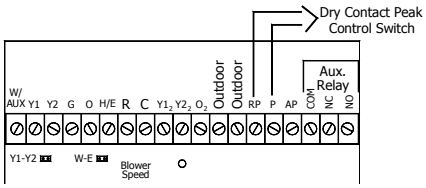

6-Position Low Voltage Terminal Block Coding

RP = Peak Control Input Common
P = Peak Control Input
AP = Anticipated Peak (Pre-Peak) Control Input
COM = Peak Control Output Common
NC = Peak Control Output (Normally Closed)
NO = Peak Control Output (Normally Open)

Pressure Drop Through Heat Exchanger

STATIC PRESSURE (Feet Water Column) Based on 80 degree entry water temperature with a 50% glycol mix.	.1 ft @ 2 GPM .2 ft @ 4 GPM .4 ft @ 6 GPM .7 ft @ 8 GPM 1.1 ft @ 10 GPM

Typical Floor Zone Design

Pipe Size	Maxiumum Pipe Length
3/8"	200'
1/2"	300'
5/8"	500'

Pipe length will vary by manufacturer.

Typical System Plumbing

- There are many ways to connect plumbing and regulate temperature of water supplied from the primary loop. These are typical plumbing schematics.

Single Temperature Zone

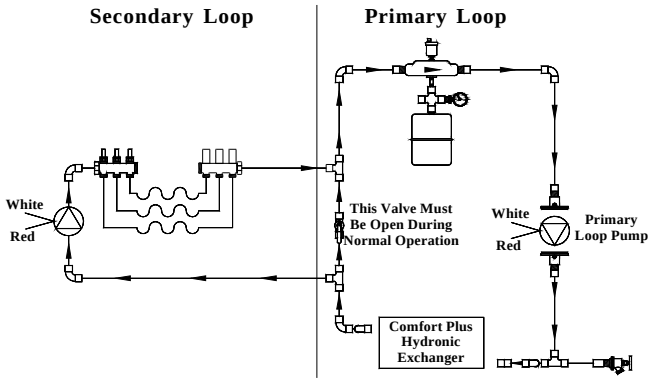

Air Handler Applications

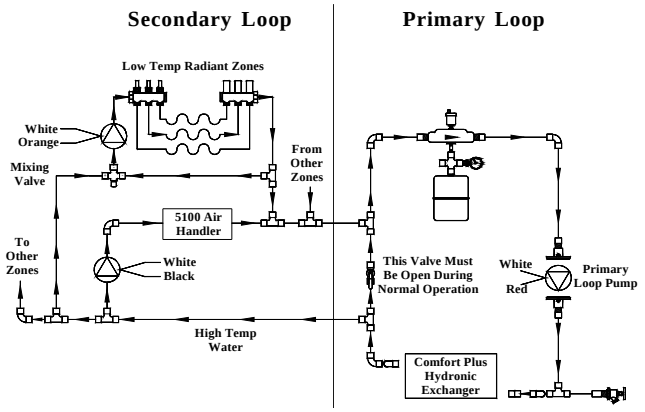

Primary Water Loop Plumbing

- The Comfort Plus Hydronic System must be plumbed with a primary water loop consisting of a minimum of 10' of 1" pipe and its own circulator pump (Grundfos UP15-42F single speed 115 VAC or equal recommended). The primary loop serves to regulate heat transfer from the unit's heat exchanger. A kit containing components generally installed with hydronic heat systems is available from Steffes. The primary loop must be powered by the Comfort Plus control system.
- The Comfort Plus Hydronic unit is factory configured for left side plumbing attachment only.

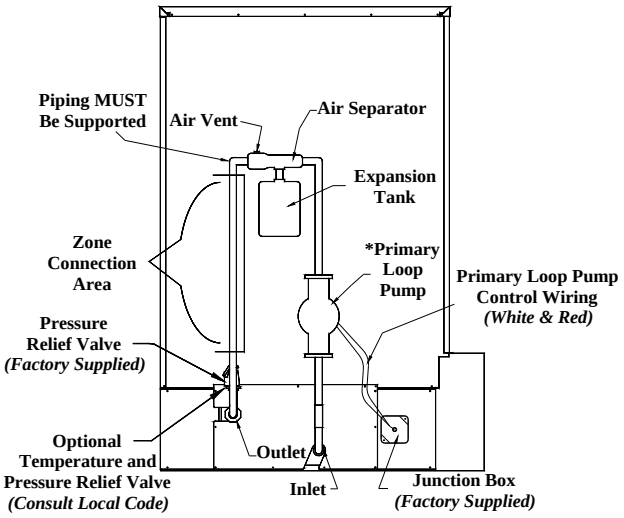

Low Voltage Wall Thermostat, Sensor, and Compressor Connections

- 24 VAC wall thermostat must be used.
- A digital wall thermostat is recommended for use with Comfort Plus Systems. If utilizing a mechanical wall thermostat, it may be necessary to add a load resistor (250 ohm, 5 watt) due to the low current draw (.01 amps) on the heat call input circuit.
- In heat pump applications, the Honeywell brand thermostat is recommended and shown in the wiring schematic.
- An outdoor temperature sensor is included with the system to provide outdoor temperatures for automatic charge control (regulation of stored heat).

Single Hydronic Heating Zone Application

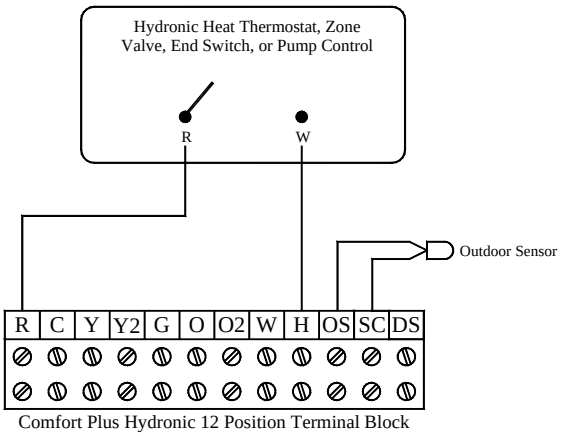

Terminal Block Code Designations

R = Low Voltage Hot
C = Low Voltage Common
Y = Compressor/Stage 1 Heat Call
Y2 = Compressor Output
G = Fan Call
O = Reversing Valve Input
O2 = Reversing Valve Output
W = Stage 2 Heat Call
H = Hydronic Heat
OS = Outdoor Temperature Sensor
SC = Outdoor Temperature Sensor Common
DS = Duct Temperature Sensor

Specifications for Standard 240VAC Systems

MODEL	5120		5130		5140	
Charging Input (See Note 1)	19.2 kW	24.8 kW	28.8 kW	37.2 kW	38.4 kW	45.6 kW
Single Feed: Minimum Circuit Ampacity (240V Systems) (Includes 25% Derate for Continuous Load)	110	140	160	204	210	248
Element Current Draw	80 AMPS	104 AMPS	120 AMPS	155 AMPS	160 AMPS	190 AMPS
Element Circuits Required (See Note 2)	3-40 AMP	3-50 AMP	4-40 AMP	4-50 AMP	4-50 AMP	4-60 AMP
Pump/Blower/Controls Circuit Required (See Note 2)	One 15 AMP (10 AMPS maximum load)					
Pump Voltage	120V (Neutral Conductor Required)					
Blower/Controls Voltage	240V or 208V					
Storage Capacity (See Note 3)	120 kWh (426,500 BTU)		180 kWh (614,160 BTU)		240 kWh (818,880 BTU)	
Approximate Installed Weight	2,218 lbs		3,046 lbs		3,894 lbs	
Pipe Size – Water Inlet/Water Outlet	1”					
Output Water Temperature Selection Range	50°F to 185°F					
Maximum Working Pressure	20 PSIG requires 30 PSI Pressure Relief Valve (Standard) 60 PSIG requires 75 PSI Pressure Relief Valve 125 PSIG requires 150 PSI Pressure Relief Valve					
Minimum Flow Rate (primary loop)	1 GPM per 10,000 BTU of required output at 20°F temperature rise (10 GPM maximum)					
Maximum Maintainable Heat Loss (See Note 3)						
8 Consecutive Charge Hours (BTU/hr)	28,013	34,188	42,002	49,201	55,991	65,613
12 Consecutive Charge Hours (BTU/hr)	42,002	45,550	62,986	65,613	84,003	87,484
18 Consecutive Charge Hours (BTU/hr)	62,986	81,376	94,478	122,047	125,971	131,225

Note 1: Standard configuration (240V) systems can be connected to 208V; however, the charging input of the system will be derated by 25%. If 208V specific charging voltage is required, it is available as a special factory order. For 277V systems, refer to the 7100 series.

Note 2: Unit is factory configured to be field connected to multiple line voltage circuits. If single feed to the elements and pump/blower/system controls circuits is desired, an optional single feed kit is available to order.

Note 3: The size and heating ability of the system required for an installation is dependent on the heat loss of the area and the power company’s off-peak hours. In addition, if the unit is not installed within the heated area, heat lost statically must be taken into account when sizing a system. Contact Steffes Corporation for assistance in selecting an appropriately sized system.

Optional Steffes Air Handler

The Steffes Air Handler is an optional device designed to interface to the Comfort Plus Hydronic (5100 Series) furnace to allow it to provide forced air heating as a stand alone furnace or as a supplement to other ducted heating systems such as a heat pump. When used with a heat pump, it allows the Comfort Plus Hydronic furnace to serve as the back-up heat source and to provide comfort modulation. Heat pumps can be operated to much lower temperatures allowing for full utilization of its efficiency and optimizing system performance. A duct sensor constantly monitors outlet air temperature and modulates the precise amount of stored off-peak heat needed to eliminate cool and uncomfortable discharge air temperatures typically associated with heat pump systems during cool outdoor temperatures. The air handler will also direct the heat lost statically through the furnace's outer panels into the ductwork for delivery to the living space (automatic static heat recovery). The internal controls of the Comfort Plus Hydronic furnace automatically regulate the operation of the air handler. The Steffes Air Handler includes a return plenum, supply air blower, water coil, and air filter. It is painted and fully insulated. The Air Handler attaches directly to the right side of the Steffes furnace.

SPECIFICATIONS	½ HP, 60 HZ Variable Speed (ECM) Air Handler	1 HP, 60 HZ Variable Speed (ECM) Air Handler
Order Item Number	1302132	1302134
Dimensions (H x L x D)	72 11/16" x 23 ½" x 23 7/8"	75 11/16" x 26 ½" x 23 7/8"
Approximate Weight	200 lbs	225 lbs
Maximum Static Pressure (inches water column)	.75 inches H_20	.75 inches H_20
Maximum Water Coil Output	60,000 BTU/hr	90,000 BTU/hr
Maximum Outlet Temperature	120°F	120°F
A-Coil Tray - Front Access (H x L x D)	30" x 22 5/16" x 22 3/4"	33" x 25 5/16"x 22 3/4"
Filter Dimensions	20" x 20" x 2"	25" x 20" x 2"
Voltage	240/208 VAC	240/208 VAC
Wattage	560W	1,050W
CFM ratings	1000, 1200, 1400, 1600	1200, 1400, 1600, 2000

- ½ HP configuration can accommodate most 1.5 to 4 ton heating/cooling coils
- 1 HP configuration can accommodate most 3 to 5 ton heating/cooling coils
- The 1 HP air handler 90,000 BTU/hr water coil output may decrease when using heating/cooling coils smaller than 5 tons
- Interfaces to multi-speed air conditioners or heat pumps. When interfaced to a 2-stage air conditioner or heat pump, the ECM motor will operate at 70% of the selected air flow in low speed (Stage 1) compressor mode. If 50% air flow is required in low speed, a Stage 1 speed adjusting relay must be installed. Steffes recommends the Allen Bradley Relay #700-HA32A24 with Relay Base #700-HN125 or equivalent.

Single Stage Heat Pump

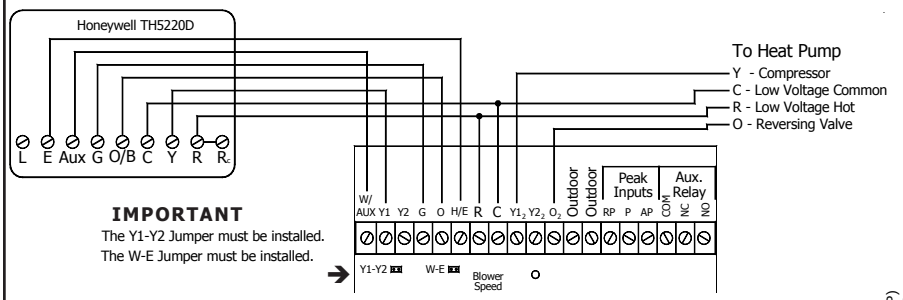

IMPORTANT

The Y1-Y2 Jumper must be installed.
The W-E Jumper must be installed.

Two Stage Heat Pump

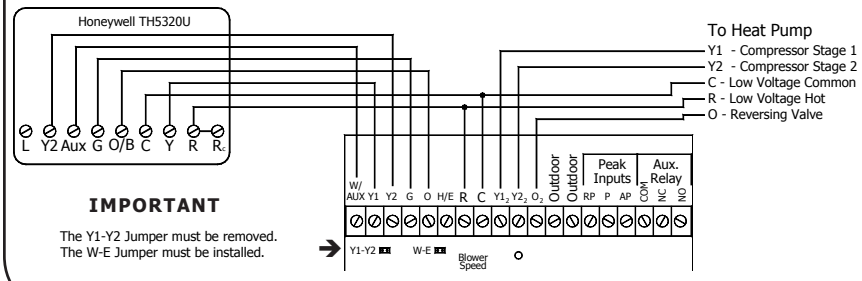

IMPORTANT

The Y1-Y2 Jumper must be removed.
The W-E Jumper must be installed.
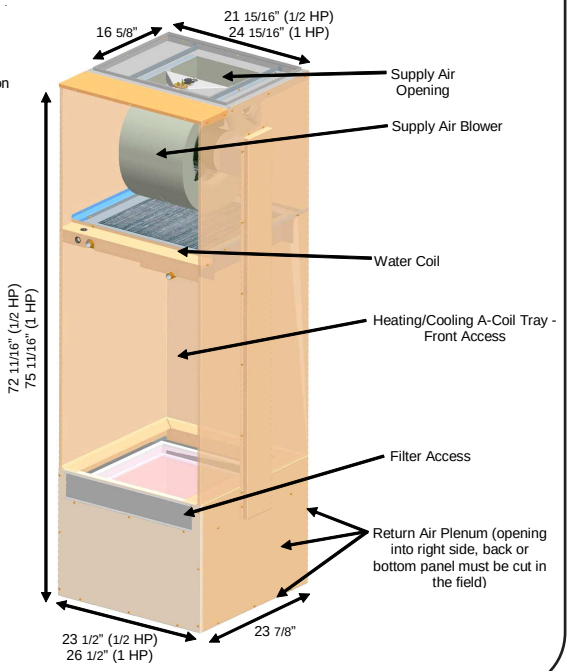
DIMENSIONS